HIGH-PRESSURE SHUT-OFF GLOBE VALVE V10.1

PN 100–500; DN 6–15; T_{MAX}: 600 °C

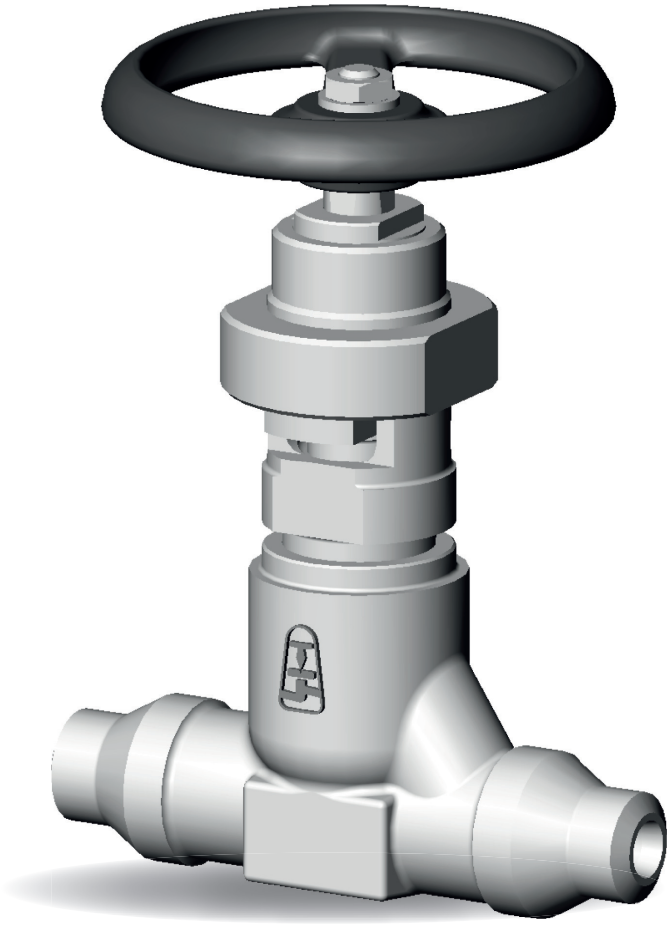

APPLICATION

- water, steam, gas, oil, petroleum products, non-aggressive and aggressive substances

CONNECTION

- weld ends

OPERATION

- handwheel

DESCRIPTION

- rotating rising stem
- design of the body is straight
- shut-off cone
- conical seat
- sealing surface is welded by hard facing Stellite 6
- complies with the requirements of the directive 2014/68/EU and standard EN 13709
- testing is carried out according to standard EN 12266-1, part 1

BASIC DESIGN OPTIONS

- delivery according to TRD 201 on request

PRESSURE-TEMPERATURE-RATINGS

Material	PN	Admissible operating pressure PS [bar] at operating temperature TS [°C]																			
		-10	50	100	200	250	300	350	400	425	450	475	500	520	540	550	560	570	580	590	600
14MoV6-3 (1.7715)	100	100	100	100	100	99	98	94	88	81	73	65	58	52	48	45	43	41	40	39	38
	160	160	160	160	160	159	157	151	140	129	117	104	92	84	76	72	68	66	63	62	61
	250	250	250	250	250	248	246	236	219	202	183	162	145	131	119	113	107	103	99	97	96
	320	320	320	320	320	317	315	301	280	259	234	207	185	168	152	145	137	132	127	124	123
	400	400	400	400	400	397	394	377	350	323	292	259	231	210	190	181	171	165	158	155	153
	500	500	500	500	500	496	492	471	438	404	365	324	289	262	238	226	214	206	198	194	191
11CrMo9-10 (1.7383)	100	100	100	100	100	100	100	100	100	100	100	93	85	65	49	43	38	32	29	25	22
	160	160	160	160	160	160	160	160	160	160	160	148	136	104	79	69	60	52	46	40	36
	250	250	250	250	250	250	250	250	250	250	250	232	213	163	123	108	94	81	72	63	56
	320	320	320	320	320	320	320	320	320	320	320	296	273	208	157	138	120	103	92	80	72
	400	400	400	400	400	400	400	400	400	400	400	370	341	260	197	172	150	129	114	100	90
	500	500	500	500	500	500	500	500	500	500	500	463	426	325	246	215	188	161	143	125	112

USED MATERIALS

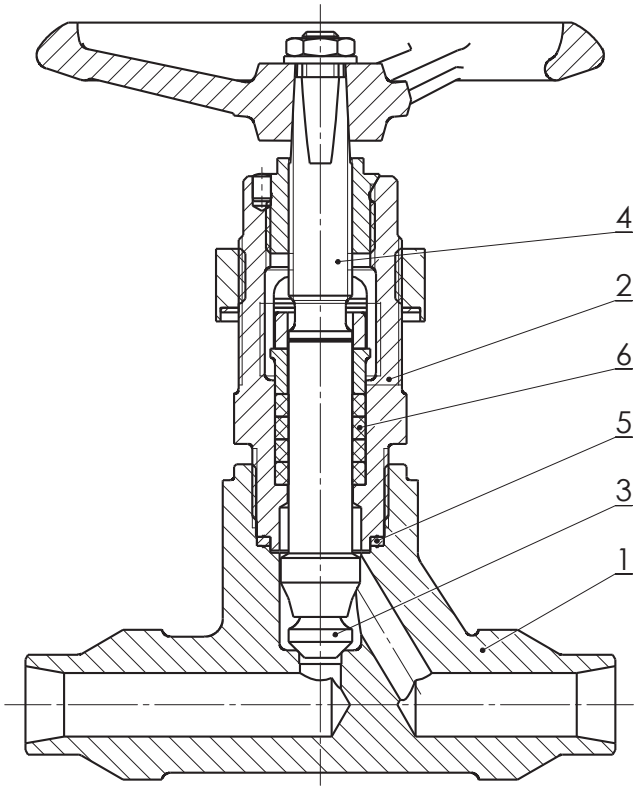

Pos.	Part	Material	
1	Body	15 128 (14MoV6-3,1.7715)	11CrMo9-10 (1.7383)
	Hard facing of body sealing surface	Stellite 6	Stellite 6
2	Adapter	15 128 (14MoV6-3, 1.7715)	11CrMo9-10 (1.7383)
3	Disc	X22CrMoV12-1 (1.4923)	
4	Stem	X22CrMoV12-1 (1.4923)	
5	Gasket	Graphite	
6	Gland packing	Graphite	

VALVE DIMENSIONS

Weld ends, socket weld

Face-to-face dimensions: as per table
Weld ends: DIN 3239 – part 1
Groove form: DIN 2559 – sheet 1 – form 22

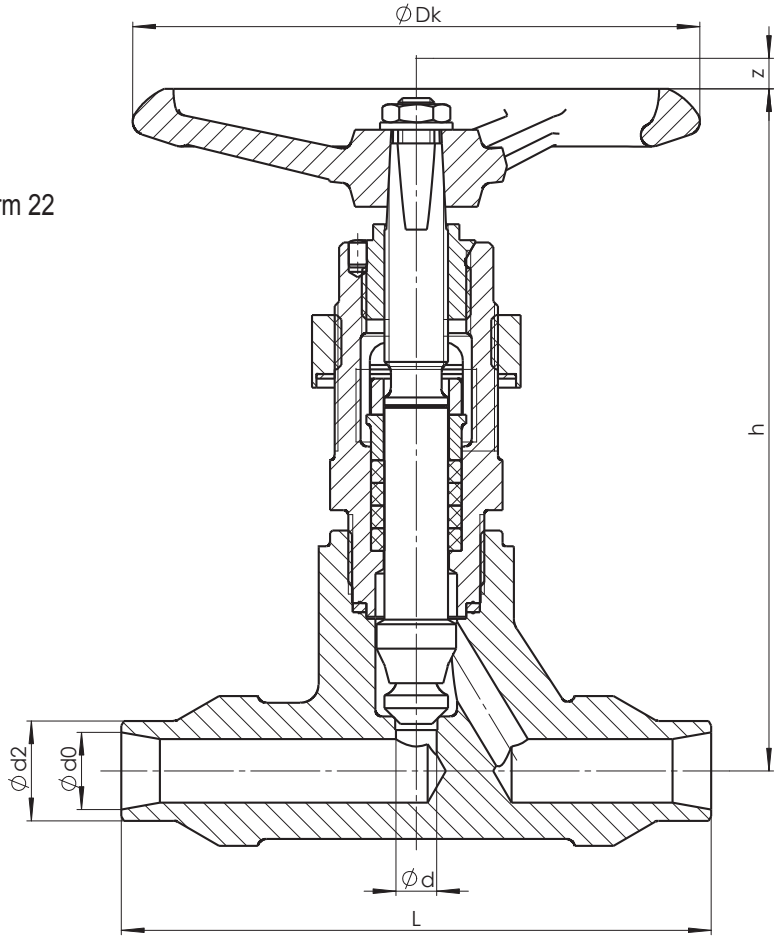

WELD ENDS

Nominal pressure	Nominal size	Face-to-face	Centre-to-top	Diameter drilling	Stroke	Handwheel	Weld ends		Approximate weight	Pipe dimensions
PN	DN	L	h	d	z	D_k	d_2	d_0	m [kg]	
100	6	130	150	9	9	125	10	7	2,0	10,0x2,0
	10						18	13	1,9	17,2x2,0
	15						22	17	1,9	21,3x2,0
160	6						12	7	2,0	12,0x2,5
	10						18	13	1,9	17,2x2,0
	15						22	17	1,9	21,3x2,0
250	6						12	7	2,0	12,0x2,5
	10						18	12	1,9	17,2x2,6
	15						22	16	1,9	21,3x2,6
320	6						12	7	2,0	12,0x2,5
	10						18	12	1,9	17,2x2,6
	15						22	15	1,9	21,3x3,2
400	6						14	6	2,0	14,0x4,0
	10						18	10	1,9	17,2x3,6
	15						28	17	1,9	26,9x5,0
500	6						14	6	2,0	14,0x4,0
	10						22	11,5	1,9	21,3x5,0
	15						32	16,5	1,9	33,7x8,0

Missing data on request

VALVE DESCRIPTION CODE

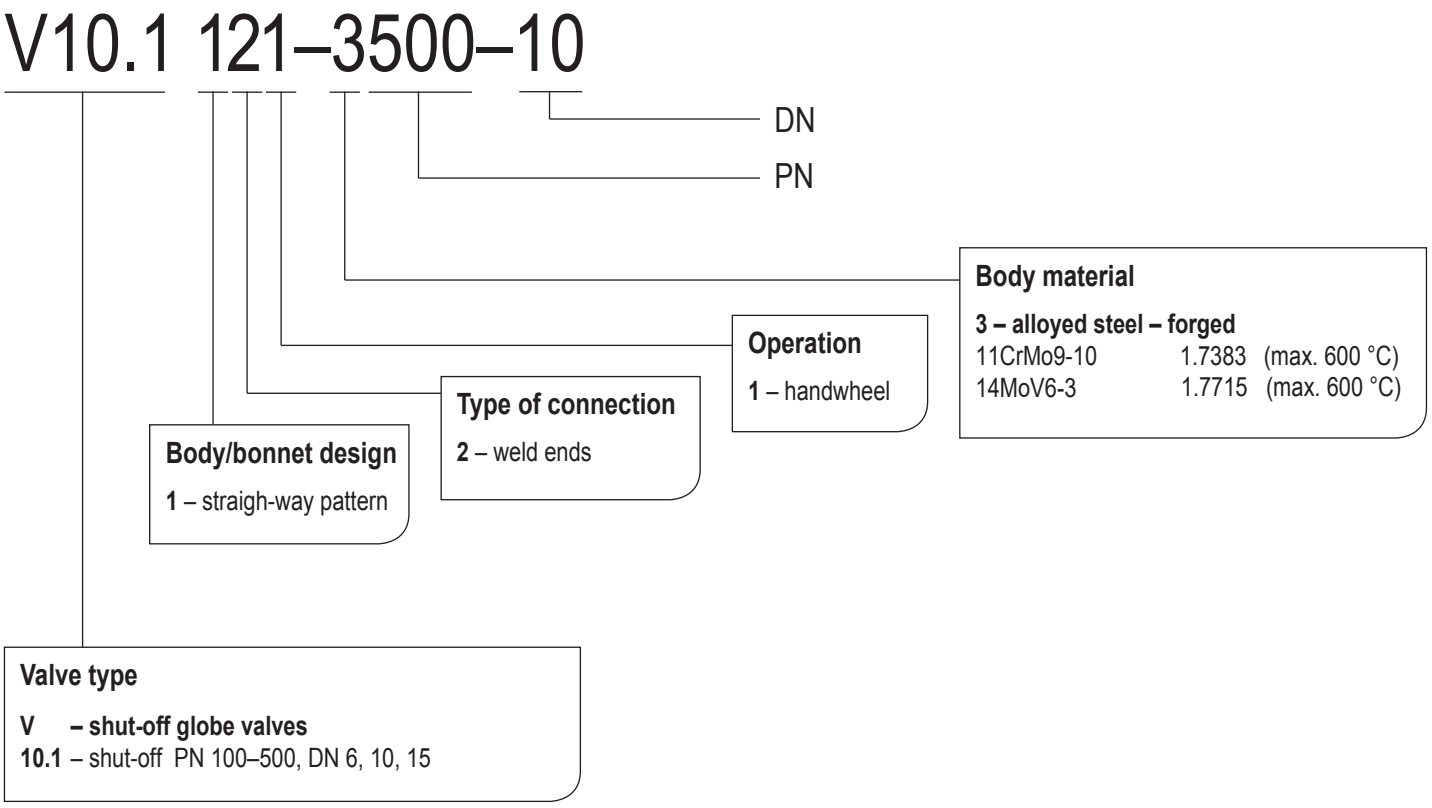

VALVE INSTALLATION

Valve can be installed in any position. Medium must flow under the cone in accordance with the direction indicated on the valve body.
It is necessary to consider the following points during assembly and operation:

- operating conditions must comply with operating parameters of the valve
- proper function of the valve is affected by the presence of impurities in the pipeline and flowing medium, therefore it is necessary keep working environment a pipeline clean, for example with using filters
- the medium used must be comply with the corrosion resistance of the valve material
- use of mechanically damaged valves during the operation is prohibited

The service life of valves significantly extends regular maintenance and minor repairs carried out by trained personnel.