HIGH-PRESSURE SHUT-OFF GLOBE VALVE V10

PN 100 (1.0565), 160 (1.4571); DN 6–15; T_{MAX}: 600 °C

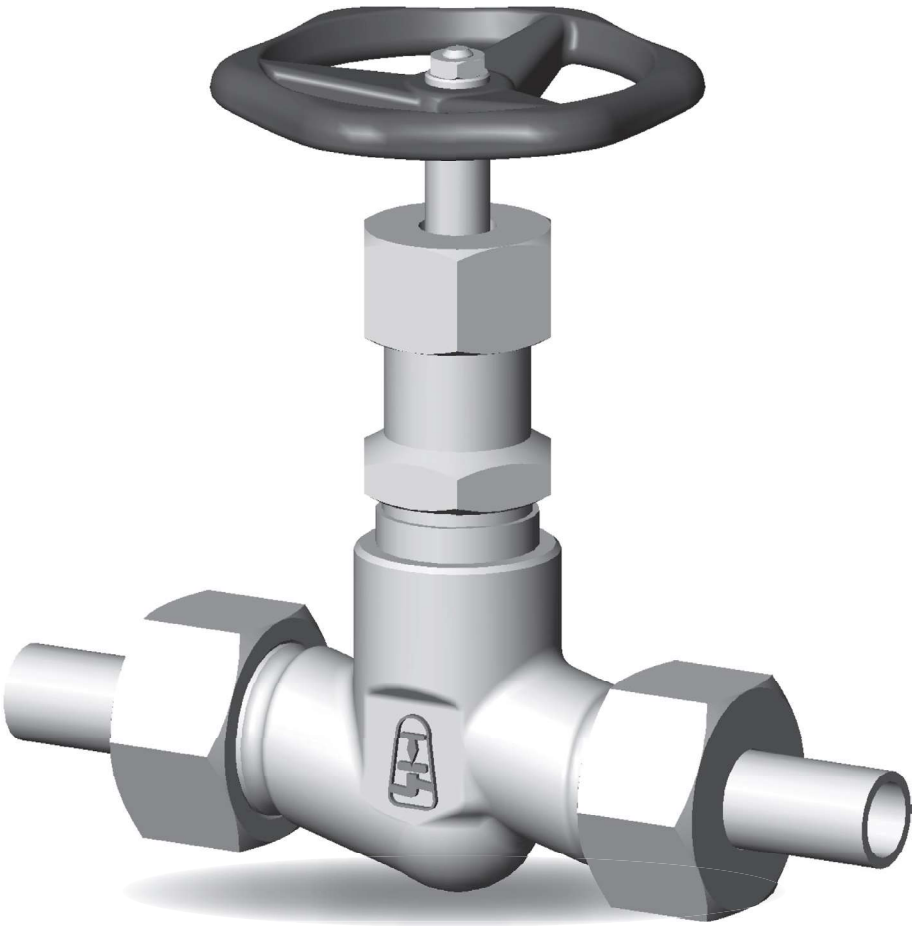

APPLICATION

- water, steam, gases, oils, petroleum products, non-aggressive and aggressive substances

CONNECTION

- weld ends, branch, union nut

OPERATION

- handwheel

DESCRIPTION

- high-pressure forged globe valve
- rotating rising stem
- straight or angle pattern body shape (angle body only for PN 160)
- shut-of cone
- conical seat
- sealing surfaces are welded by hard steel
- complies with the requirements of the directive 2014/68/EU, EN 13 709
- testing is carried out according to EN 12266-1

BASIC DESIGN OPTIONS

- connecting dimensions according to customer requirements
- other testing to customer requirements
- according to TRD 201

PRESSURE-TEMPERATURE-RATINGS

Material	PN	Admissible operating pressure PS [bar] at operating temperature TS [°C]									
		-10	50	100	150	200	250	300	350	400	450
P355NH (1.0565) P250GH (1.0460)	100	100	100	93.3	86.7	75.6	71.1	64.4	60	57.8	46.2

USED MATERIALS

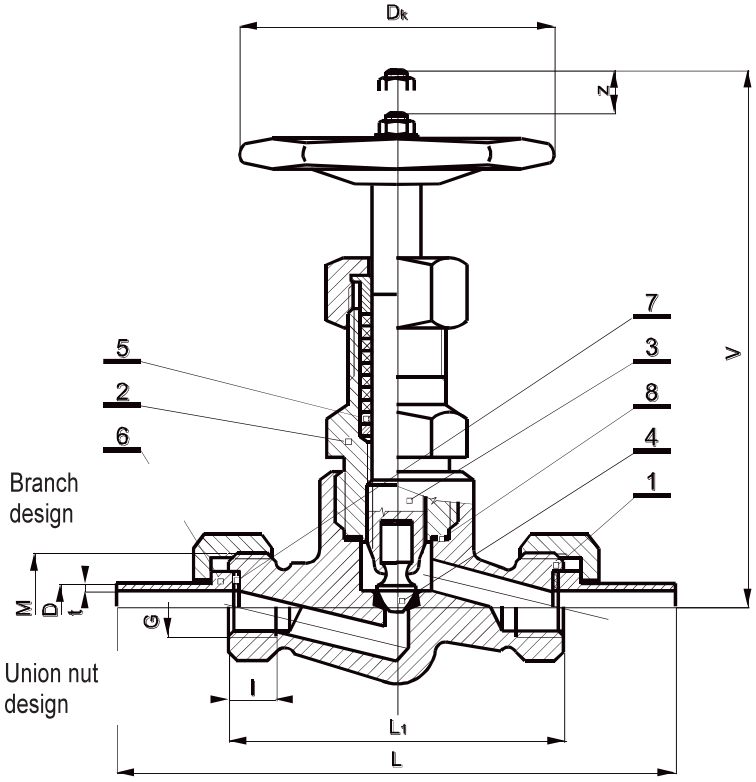

Pos.	Part	Material
1	Body	P355NH (1.0565), P250GH (1.0460)
	Hard facing of sealing surface	18Cr10Ni2Mo
2	Adapter	St50-2 (1.0050), P250GH (1.0460)
3	Stem	X20Cr13 (1.4021)
4	Disc	X22CrMoV12-1 (1.4923)
5	Packing	Graphite
6	Branch	11523 (1.0570)
7	Gasket (branch)	Graphite
8	Gasket (adapter)	17 246 (1.4878)

VALVE DIMENSIONS

PN	DN	øD (mm)	t (mm)	L_3 (mm)	M	G	l (mm)	L_2 (mm)	h (mm)	z (mm)	ØDk (mm)	m [kg]
100	6	10	2	160	M27x1,5	1/4“	11	90	140	7	125	1,1
	10	14	2	160	M27x1,5	3/8“	13	90	140	7	125	1,1
	15	22	2,5	180	M33x1,5	1/2“	16	100	140	7	125	1,5

PRESSURE-TEMPERATURE-RATINGS

Material	PN	Admissible operating pressure PS [bar] at operating temperature TS [°C]					
		-196 1)	-10	50	100	150	200
X6CrNiMoTi17-12-2 1.4571	160	160	160	160	146	140	131

1) Aplication for temperatures from - 196 °C to + 200 °C on request

USED MATERIALS

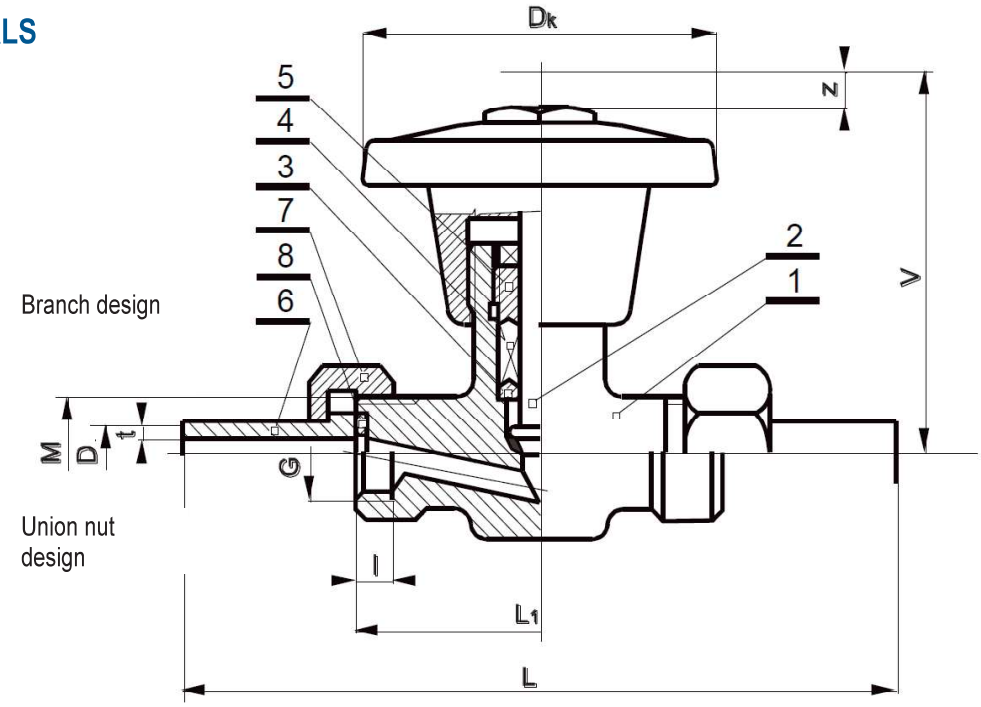

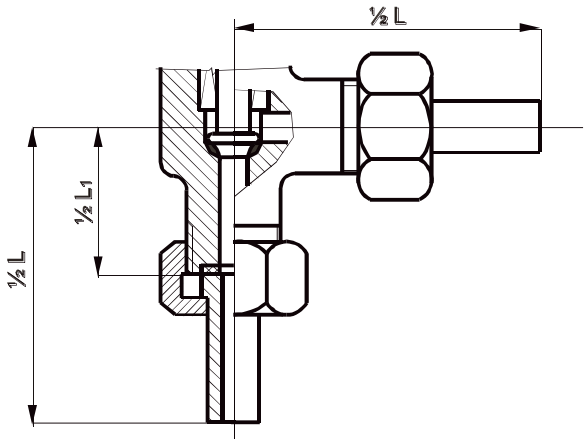

Pos.	Part	Material
1	Body	X6CrNiMoTi17-12-2 (1.4571)
2	Disk	X6CrNiMoTi17-12-2 (1.4571)
	Hard facing of sealing surface (only for gases)	Stellite 6
3	Ring	X6CrNiMoTi17-12-2 (1.4571)
4	Gland packing	PTFE
5	Bushing	X20Cr13 (1.4021)
6	Branch	X6CrNiMoTi17-12-2 (1.4571)
7	Nut	X6CrNiTi18-10 (1.4541)
8	Gasket	Graphite

ROZMĚRY ARMATURY

PN	DN	øD (mm)	t (mm)	L_3 (mm)	M	G	l (mm)	L_2 (mm)	h straight way valve (mm)	h angle type(mm)	z (mm)	øDk (mm)	m straight way valve [kg]	m angle type valve [kg]
160	6	10	2	130	M22x1,5	3/8“	13	70	65	-	7	80	0,8	-
	10	14	2,5	160	M27x1,5	1/2“	16	90	75	65	9	80	1	0,9

VALVE DESCRIPTION CODE

V10 111–4100–10

DN

PN

Body material

4 – carbon steel – forged

P 355NH	1.0565	(max. 450 °C)
P250GH	1.0460	

0 – stainless steel

X6CrNiMoTi17-12-2	1.4571	(max. 200 °C)

Operation

1 – handwheel

Type of connection

2 – weld ends
3 – branch
5 – union nut
8 – combination

Body/bonnet style

1 – straigh-way pattern
2 – angle

Valve type

V – shut-off globe valves and with regular cone
10 – shut-off valves PN 100, 160; DN 6, 10,15

VALVE INSTALATION

Valve can be installed in any position. Medium must flow under the cone in accordance with the direction indicated on the valve body.
It is necessary to consider the following points during assembly and operation:

- operating conditions must comply with operating parameters of the valve
- proper function of the valve is affected by the presence of impurities in the pipeline and flowing medium, therefore it is necessary keep working environment a pipeline clean, for example with using filters
- medium used must comply with the corrosion resistance of the valve material
- use of mechanically damaged valves during the operation is prohibited

The service life of valves significantly extends regular maintenance and minor repairs carried out by trained personnel.