HIGH-PRESSURE LIFT CHECK VALVE Z15.3

PN 63-250, DN 65, PN 320-630, DN 10-50, T_{MAX}: 600 °C

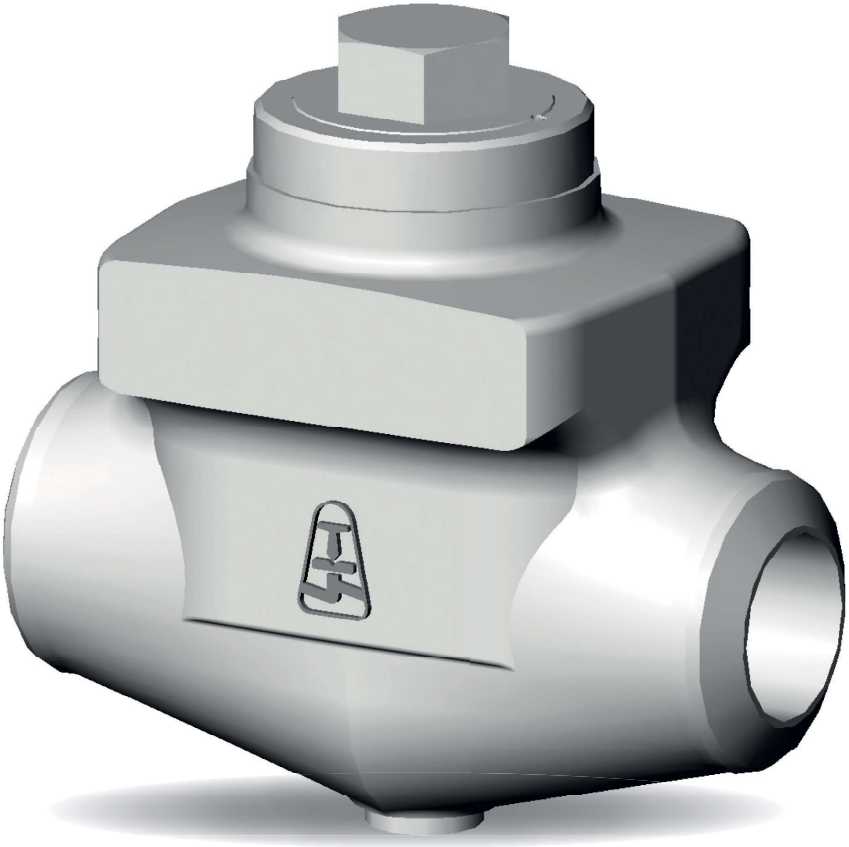

APPLICATION

- water, steam, non-aggressive substances

CONNECTION

- weld ends, flanged

OPERATION

- self-acting control

DESCRIPTION

- straight – way pattern
- sealing surfaces are welded by hard steel or stellite
- complies with the requirements of the directive 2014/68/EU
- testing is carried out according to EN 12266-1 or on request

BASIC DESIGN OPTIONS

- free from oil and grease
- other testing on request
- delivery on request according to TRD 201
- with spring

PRESSURE-TEMPERATURE-RATINGS

Material	PN	Admissible operating pressure PS [bar] at operating temperature TS [°C]																		
		-10	50	100	150	200	250	300	350	400	450	500	510	520	530	540	550	560	570	580
P250GH (1.0460) (11 416)	63	63	63	63	63	63	44.8	40.6	37.8	36.4	21	-	-	-	-	-	-	-	-	-
	100	100	100	100	100	100	71.1	64.4	60	57.8	33	-	-	-	-	-	-	-	-	-
	160	160	160	160	160	160	110	94.1	88.3	78.5	45	-	-	-	-	-	-	-	-	-
	250	250	250	250	250	250	172	147	137	123	70	-	-	-	-	-	-	-	-	-
	320	320	320	320	320	320	320	273	233	182	103	-	-	-	-	-	-	-	-	-
	400	400	400	400	400	400	400	342	290	227	129	-	-	-	-	-	-	-	-	-
	500	500	500	500	500	500	490	427	364	284	162	-	-	-	-	-	-	-	-	-
16Mo3 (1.5415)	63	63	63	63	63	60,2	56	47,6	44,8	42	40,6	28,3	21,5	17	13,6	-	-	-	-	-
	100	100	100	100	100	95,6	88,9	75,6	71,1	66,7	64,4	44,9	34,1	26,9	21,6	-	-	-	-	-
	160	160	160	160	160	157	147	136	123	116	110	79,9	60,7	47,9	38,4	-	-	-	-	-
	250	250	250	250	250	245	229	213	191	181	171	124	94,2	74,4	59,5	-	-	-	-	-
	320	320	320	320	320	320	320	320	318	298	288	179	136	107	86	-	-	-	-	-
	400	400	400	400	400	400	400	400	398	373	360	224	170	134	108	-	-	-	-	-
	500	500	500	500	500	500	500	484	422	398	361	321	184	145	116	-	-	-	-	-
	630	630	630	630	630	630	630	610	532	501	455	405	232	183	146	-	-	-	-	-
13CrMo4-5 (1.7335)	63	63	63	63	63	63	61.6	57.4	53.2	50.4	47.6	38.4	32.5	26.3	21.8	17.6	13.7	-	-	-
	100	100	100	100	100	100	97.8	91.1	84.4	80	75.6	60.9	51.6	41.8	34.7	28	21.8	-	-	-
	160	160	160	160	160	160	157	152	150	143	136	116	98.1	77.5	60.8	45.1	34.3	-	-	-
	250	250	250	250	250	250	245	237	233	223	213	180	151	122	95.1	71.6	53	-	-	-
	320	320	320	320	320	320	320	314	298	286	273	232	196	155	122	91.2	67.7	-	-	-
	400	400	400	400	400	400	400	392	373	357	341	289	245	194	152	114	85.3	-	-	-
	500	500	500	500	500	500	500	500	500	500	489	433	363	287	234	189	148	-	-	-
	630	630	630	630	630	630	630	630	630	630	612	468	391	310	253	204	159	-	-	
11CrMo9-10 (1.7383)	63	63	63	63	63	63	63	61.8	59.8	56.9	54.9	46.1	38,7	31.4	27,4	23.5	20	17.3	14.8	12.8
	100	100	100	100	100	100	100	98.1	93.2	89.2	85.3	72.6	60,3	48.1	42	35.9	30.7	26.4	22.7	19.6
	160	160	160	160	160	160	160	152	150	143	136	116	96,7	77.5	68,6	59.8	51	44	37.8	32.5
	250	250	250	250	250	250	250	237	233	223	213	180	151	122	107	93.2	79.4	68.4	58.9	50.7
	320	320	320	320	320	320	320	314	298	286	273	232	193	155	137	119	102	87.9	75.6	65.1
	400	400	400	400	400	400	400	392	373	357	341	289	241	194	171	148	127	109	94.2	81
	500	500	500	500	500	500	500	500	500	500	500	426	375	325	285	246	215	188	161	143
	630	630	630	630	630	630	630	630	630	630	630	490	426	369	320	276	235	202	174	149

Material	PN	Admissible operating pressure PS [bar] at operating temperature TS [°C]																		
		-196 1)	-10	50	100	150	200	250	300	350	400	450	500	510	520	530	540	550	560	570
X6CrNiMoTi 17-12-2 (1.4571)	63	63	63	63	61.6	57.4	53.8	51.2	49	47.3	45.9	-	-	-	-	-	-	-	-	-
	100	100	100	100	97.8	91.1	85.3	81.3	77.8	75.1	72.9	-	-	-	-	-	-	-	-	-
	160	160	160	160	146	140	131	125	119	115	112	-	-	-	-	-	-	-	-	-
	250	250	250	250	229	218	204	195	186	180	174	-	-	-	-	-	-	-	-	-
	320	320	320	320	293	279	261	249	238	230	223	-	-	-	-	-	-	-	-	-
	400	400	400	400	366	349	327	311	298	288	279	-	-	-	-	-	-	-	-	-

1) Aplication for temperature from - 196 °C to + 400 °C on request

Material	PN	Admissible operating pressure PS [bar] at operating temperature TS [°C]																			
		-10	200	250	300	350	400	450	480	490	500	510	520	530	540	550	560	570	580	590	600
X10CrMoVNb9-1 (P91) (1.4903) 2)	63	63	63	63	63	63	63	63	63	63	63	63	63	63	57,5	52,4	47,6	42,8	37,6	32,8	30,0
	100	100	100	100	100	100	100	100	100	100	100	100	100	100	91,3	83,2	75,6	67,9	59,7	52,1	47,6
	160	160	160	160	160	160	160	160	160	160	160	160	160	160	146	133	121	109	95,5	83,3	76,2
	250	250	250	250	250	250	250	250	250	250	250	250	250	250	228	208	189	170	149	130	119
	320	320	320	320	320	320	320	320	320	320	320	320	320	320	292	266	242	217	191	167	152
	400	400	400	400	400	400	400	400	400	400	400	400	400	400	365	333	302	272	239	208	190
	500	500	500	500	500	500	500	500	500	500	500	500	500	500	456	416	378	340	298	260	238
	630	630	630	630	630	630	630	630	630	630	630	630	630	630	575	524	476	428	376	328	300

2) Aplication for temperature to + 650 °C on request

USED MATERIALS

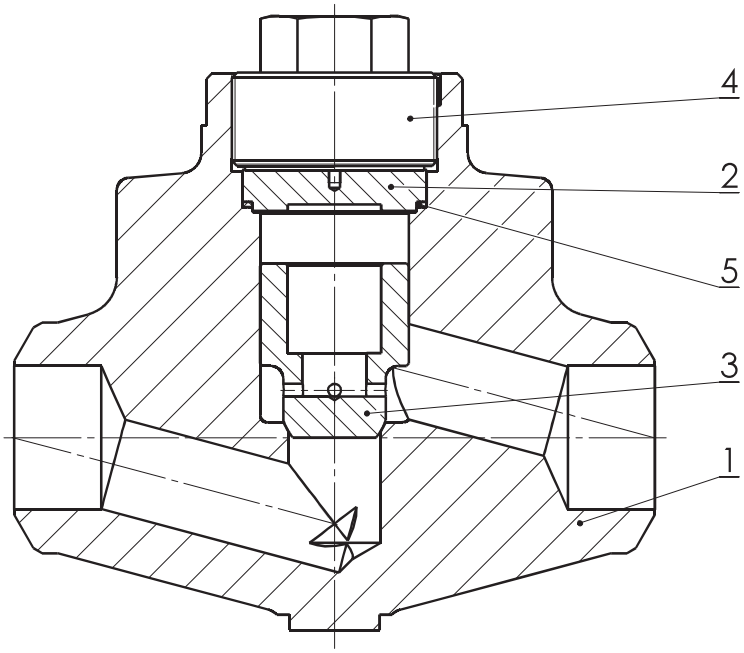

Pos.	Part	Material					
1	Body	P250GH (1.0460) (11 416)	16Mo3 (1.5415)	13CrMo4-5 (1.7335)	11CrMo9-10 (1.7383)	X6CrNiMo-Ti17-12-2 (1.4571)	X10CrMoVNb9-1, (P91), (1.4903)
	Hard facing of body sealing surface	13Cr	Stellite 6				
2	Cover	10CrMo9-10 (1.7380)	16Mo3 (1.5415)	13CrMo4-5 (1.7335)	11CrMo9-10 (1.7383)	X6CrNiMo-Ti17-12-2 (1.4571)	11CrMo9-10 (1.7383)
3	Disc	X20Cr13 (1.4021)	13CrMo4-5 (1.7335)	X20CrMoV12-1 (1.4922)	X20CrMoV11-1 (1.4922)	X6CrNiMo-Ti17-12-2 (1.4571)	X20CrMoV11-1 (1.4922)
	Hard facing of body sealing surface	Hardened	Stellite 6				
4	Pin	24CrMo5 (1.7258)	X22CrMoV12-1 (1.4923)				
5	Gasket	Graphite					

VALVE DIMENSIONS

1. Flanged

Face-to-face dimensions:	EN 558, line 2
Flanges:	EN 1092-1 (on request DIN 2501/1972)

2. Weld ends

Face-to-face dimensions:	as per table (EN 12982, line 65)
Weld ends:	as per table (DIN 3239 – line 1)
Groove form:	DIN 2559 – sheet 1 – form 22

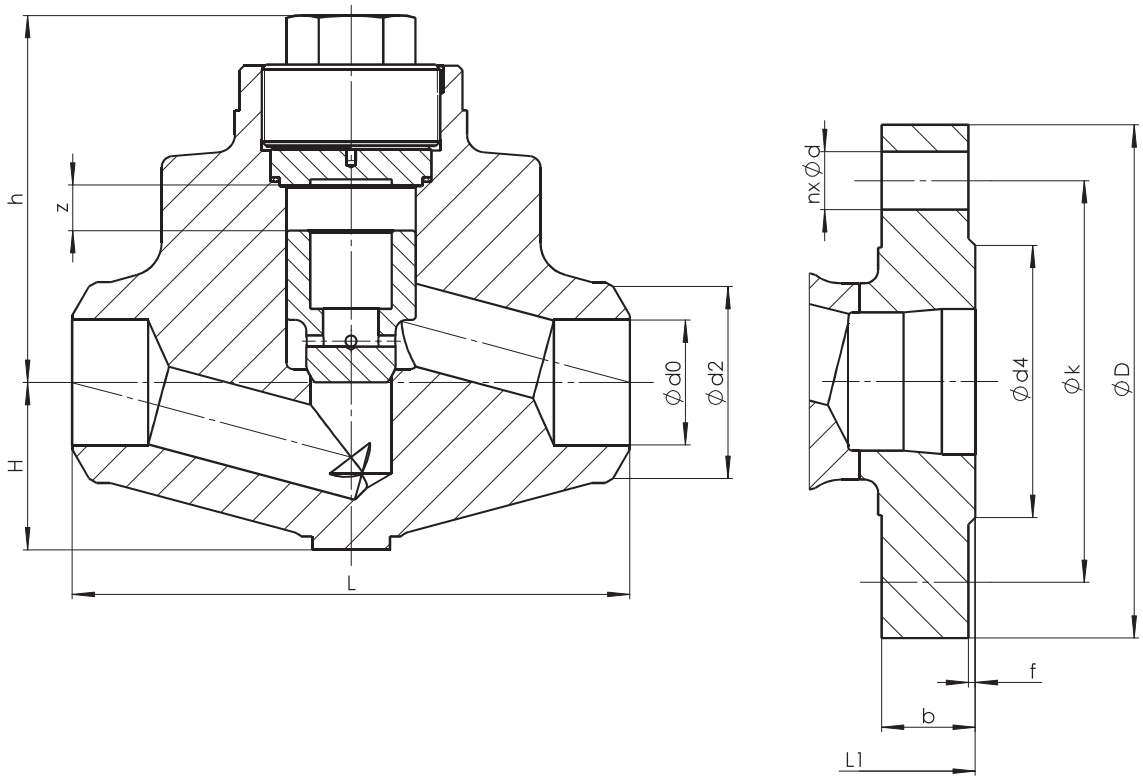

WELDING ENDS

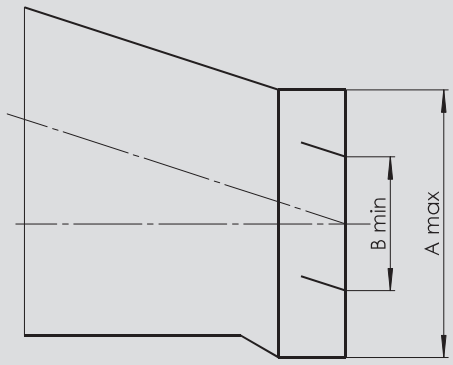

Not machined weld ends

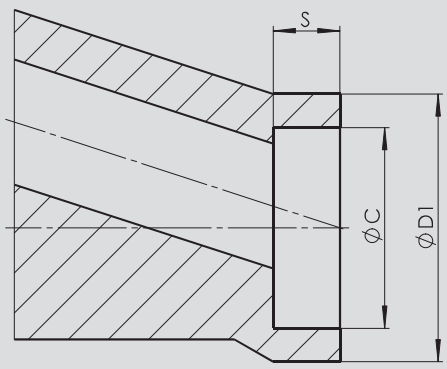

Socket weld ends

Nominal pressure	Nominal size	Centre-to-top	Disassembly height		Stroke	Flange design Socket weld acc. to ASME B16.11 or DIN 3239-2 PN320 1)							Weldind design									
													Not machined weld ends									
PN	DN	h [mm]	h4 [mm]	H [mm]	z [mm]	L1 [mm]	n	d [mm]	k [mm]	D [mm]	b [mm]	d4×f [mm]	L [mm]	d2 [mm]	d0 [mm]	$D1^{-0,5}$ [mm]	$C^{+0,2}$ [mm]	s_{min} [mm]	A_{max} [mm]	B_{min} [mm]	m [kg]	Pipe dimension
320	10	80	130	31	7	260	4	18	85	125	24	40x2	150	18	12	27	17,6	9,5	32	9	6,4	17,2x2,6
	15	80	130	31	7	260	4	18	90	130	26	45x2	150	22	15	32,5	21,7	9,5	32	14	6,4	21,3x3,2
	20	100	150	45	10	-	-	-	-	-	-	-	160	28	20	39,5	27,1	12,7	50	19	6,2	26,9x4,0
	25	100	150	45	10	300	4	22	115	160	34	68x2	160	35	24	48	33,8	12,7	50	22	6,2	33,7x5,0
	40	185	260	75	20	400	4	26	145	195	38	88x3	250	49	35	64,5	48,7	12,7	88	32	20,5	48,3x7,1
	50	185	260	75	20	400	8	26	160	210	42	102x3	250	67	47	73,5	61,1	15,9	88	40	20,2	63,5x8,8
400	10	80	130	31	7	260	4	18	85	125	28	40x2	150	18	10	-	-	-	32	9	6,4	17,2x3,6
	15	80	130	31	7	260	4	22	100	145	30	45x2	150	28	17	-	-	-	32	14	6,4	26,9x5,0
	20	100	150	45	10	-	-	-	-	-	-	-	160	34	20	-	-	-	50	19	6,2	32x6,3
	25	100	150	45	10	300	4	26	130	180	38	68x2	160	44	28	-	-	-	50	22	6,2	42,4x8
	40	185	260	75	20	400	4	30	165	220	48	88x3	250	61	40	-	-	-	88	32	20,5	60,3x11
	50	185	260	75	20	400	8	30	180	235	52	102x3	250	77	49	-	-	-	88	40	20,2	76,1x14,2
500	10	80	130	31	7	-	-	-	-	-	-	-	150	22	11,5	-	-	-	32	9	6,4	21,3x5,0
	15	80	130	31	7	-	-	-	-	-	-	-	150	32	16,5	-	-	-	32	14	6,4	32x8,0
	20	100	150	45	10	-	-	-	-	-	-	-	160	38	20	-	-	-	50	19	6,2	38x10,0
	25	100	150	45	10	-	-	-	-	-	-	-	160	49	23,5	-	-	-	50	22	6,2	48,3x12,5
	40	185	260	75	20	-	-	-	-	-	-	-	250	77	42	-	-	-	88	32	20,5	76,1x17,5
	50	185	260	75	20	-	-	-	-	-	-	-	250	86	45	-	-	-	88	40	20,2	82,5x20,0
630	10	80	130	31	7	-	-	-	-	-	-	-	150	22	11,5	-	-	-	32	9	6,4	21,3x5,0
	15	80	130	31	7	-	-	-	-	-	-	-	150	32	16,5	-	-	-	32	14	6,4	32x8,0
	20	100	150	45	10	-	-	-	-	-	-	-	160	38	20	-	-	-	50	19	6,2	38x10,0
	25	100	150	45	10	-	-	-	-	-	-	-	160	49	23,5	-	-	-	50	22	6,2	48,3x12,5
	40	185	260	75	20	-	-	-	-	-	-	-	250	77	42	-	-	-	88	32	20,5	76,1x17,5
	50	185	260	75	20	-	-	-	-	-	-	-	250	86	45	-	-	-	88	40	20,2	82,5x20,0
63	65	185	260	75	20	340	8	22	160	205	26	122x3	250	78	69	80,5	61,1	15,9	90	57	20,0	76,1x3,6
100		185	260	75	20	340	8	26	170	220	30	122x3	250	78	69	80,5	61,1	15,9	90	57	20,0	76,1x3,6
160		185	260	75	20	340	8	26	170	220	34	122x3	250	78	65	80,5	61,1	15,9	90	57	20,0	76,1x5,6
250		185	260	75	20	340	8	26	180	230	42	122x3	250	78	59,5	80,5	61,1	15,9	90	57	20,0	76,1x8,8

Flanges DN 20 and DN 32 on customer request

VALVE DESCRIPTION CODE

Z15.3 127–3320–25

DN

PN

Body materiál

3 – alloyed steel – forged

16Mo3	1.5415	(max. 530 °C)
13CrMo4-5	1.7335	(max. 550 °C)
11CrMo9-10	1.7383	(max. 580 °C)
X10CrMoVNb9-1	1.4903	(max. 650 °C)
15 128		(max. 600 °C)

4 – carbon steel – forged

P250GH	1.0460	(max. 450 °C)
11 416		(max. 450 °C)

0 – stainless steel

X6CrNiMoTi17-12-2	(1.4571)	(max. 600 °C)

Operation

7 – self-acting control

Type of connection

1 – flanged
2 – weld ends
7 – socket-weld
8 – combination
9 – other

Body/bonnet style

1 – straigh-way pattern

Valve type

Z – lift check valves
15.3 – high-pressure lift check valve forged

VALVE INSTALLATION

Recommended valve assembly - horizontal position. In the case of mounting in a position other than horizontal, a spring must be included in the valve. Medium must flow under the cone in accordance with the direction indicated on the valve body.

It is necessary to consider the following points during assembly and operation:

- operating conditions must comply with operating parameters of the valve
- proper function of the valve is affected by the presence of impurities in the pipeline and flowing medium, therefore it is necessary keep working environment a pipeline clean, for example with using filtres
- the medium used must be comply with the corrosion resistance of the valve material
- use of mechanically damaged valves during the operation is prohibited

The service life of valves significantly extends regular maintenance and minor repairs carried out by trained personnel.